Alvium
G5-040

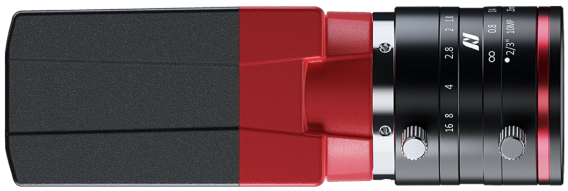

- IMX287 CMOS sensor
- GigE Vision
- High bandwidths
- 3 lens mount options

Model without hardware options

Alvium G5 - Speed up your vision application

5GigE Vision camera for demanding applications

Alvium G5-040 with Sony IMX287 runs 0.0 frames per second at 0.4 MP resolution.

The Alvium G5 camera series combines the advantages of the 5GigE interface for higher bandwidth and the flexibility of the Alvium platform offering various mount and sensor options. It enables an easy upgrade of existing systems (USB3 Vision or GigE Vision) and offers backwards compatibility with 1000BASE-T solutions. Powered by ALVIUM® Technology, the sugar cube Alvium G5 camera delivers highest image quality at a low power consumption.

Easy software integration with Vimba X and compatibility to the most popular third party image-processing libraries.

Allied Vision

Specifications

Interface	IEEE 802.3 5GBASE-T, 1000BASE-T, IEEE 802.3af Power Class 0 PoE
Resolution	728 (H) × 544 (V)
Spectral range	300 to 1100 nm
Sensor	Sony IMX287
Sensor type	CMOS
Shutter mode	GS (Global shutter)
Sensor size	Type 1/2.9
Pixel size	6.9 µm × 6.9 µm
Lens mounts (available)	C-Mount, CS-Mount, S-Mount
Max. frame rate at full resolution	Tbd at tbd MByte/s, Mono8
ADC	12 Bit
Image buffer (RAM)	512 MByte
Non-volatile memory (Flash)	1024 KByte

Output	
Bit depth	8-bit, 10-bit, 12-bit; Adaptive (10-bit, 12-bit)
Monochrome pixel formats	Mono8, Mono10, Mono10p, Mono12, Mono12p, Mono12Packed
YUV color pixel formats	YCbCr411_8_CbYYCrYY, YCbCr422_8_CbYCrY, YCbCr8_CbYCr
RGB color pixel formats	RGB8 (default), BGR8
Raw color pixel formats (Bayer)	BayerRG8, BayerRG10, BayerRG10p, BayerRG12, BayerRG12p, BayerRG12Packed

General purpose inputs/outputs (GPIOs)	
TTL I/Os	2 GPIOs (LVTTL)
Opto-isolated I/Os	1 input, 1 output

Operating conditions/dimensions	
Operating temperature	-20 °C to +60 °C (housing)

Power requirements (DC)	10.8 to 26.4 VDC AUX | IEEE 802.3af, Power Class 0 PoE
Power consumption	External power: Tbd W at 12 VDC (typical) | Power over Ethernet: Tbd W (typical)
Mass	100 g
Body dimensions (L × W × H in mm)	60 × 29 × 29

Quantum efficiency

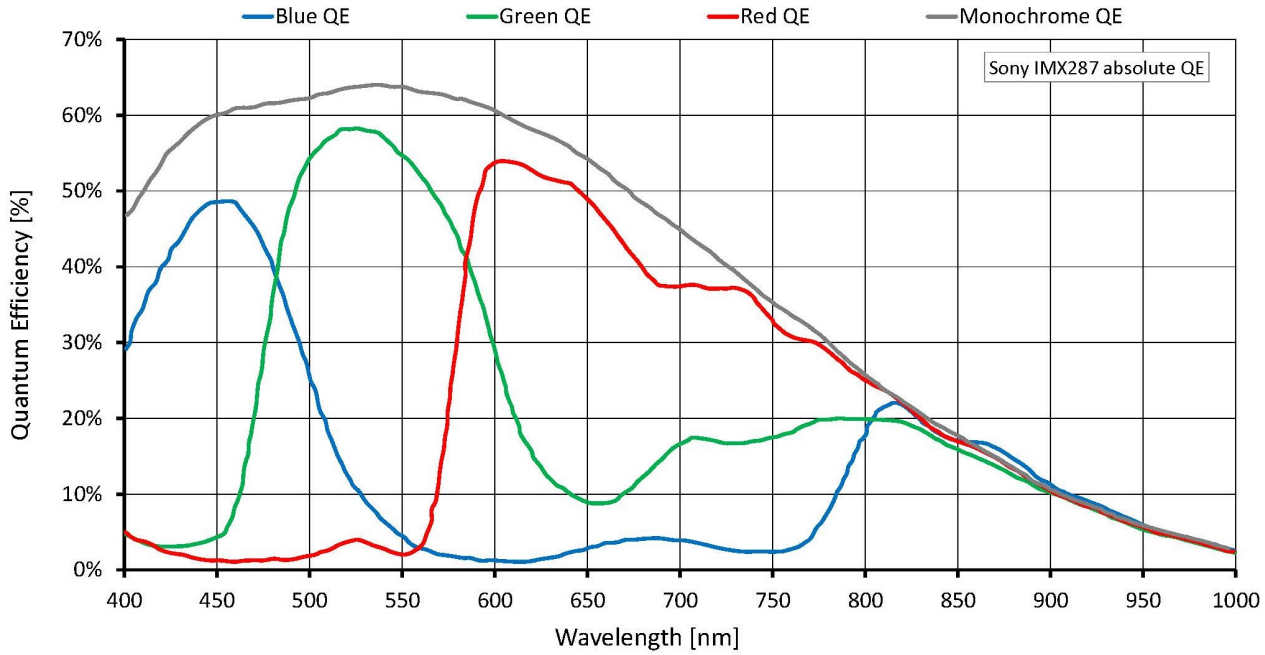

Features

Image control: Auto

- Auto exposure
- Auto gain
- Auto white balance (color models)

Image control: Other

- Adaptive noise correction
- Binning
- Black level
- Color transformation (incl. hue, saturation; color models)
- Contrast
- Custom convolution
- De-Bayering up to 5×5 (color models)
- DPC (defect pixel correction)
- FPNC (fixed pattern noise correction)
- Gamma
- LUT (look-up table)
- Reverse X/Y
- ROI (region of interest)
- Sharpness/Blur

Camera control

- Acquisition frame rate
- Action commands, incl. ToE (trigger over Ethernet)
- Bandwidth control
- Counters and timers
- Firmware update in the field
- I/O and trigger control
- Readout modes (SensorBitDepth)
- Sequencer
- Serial I/Os
- Temperature monitoring
- User sets
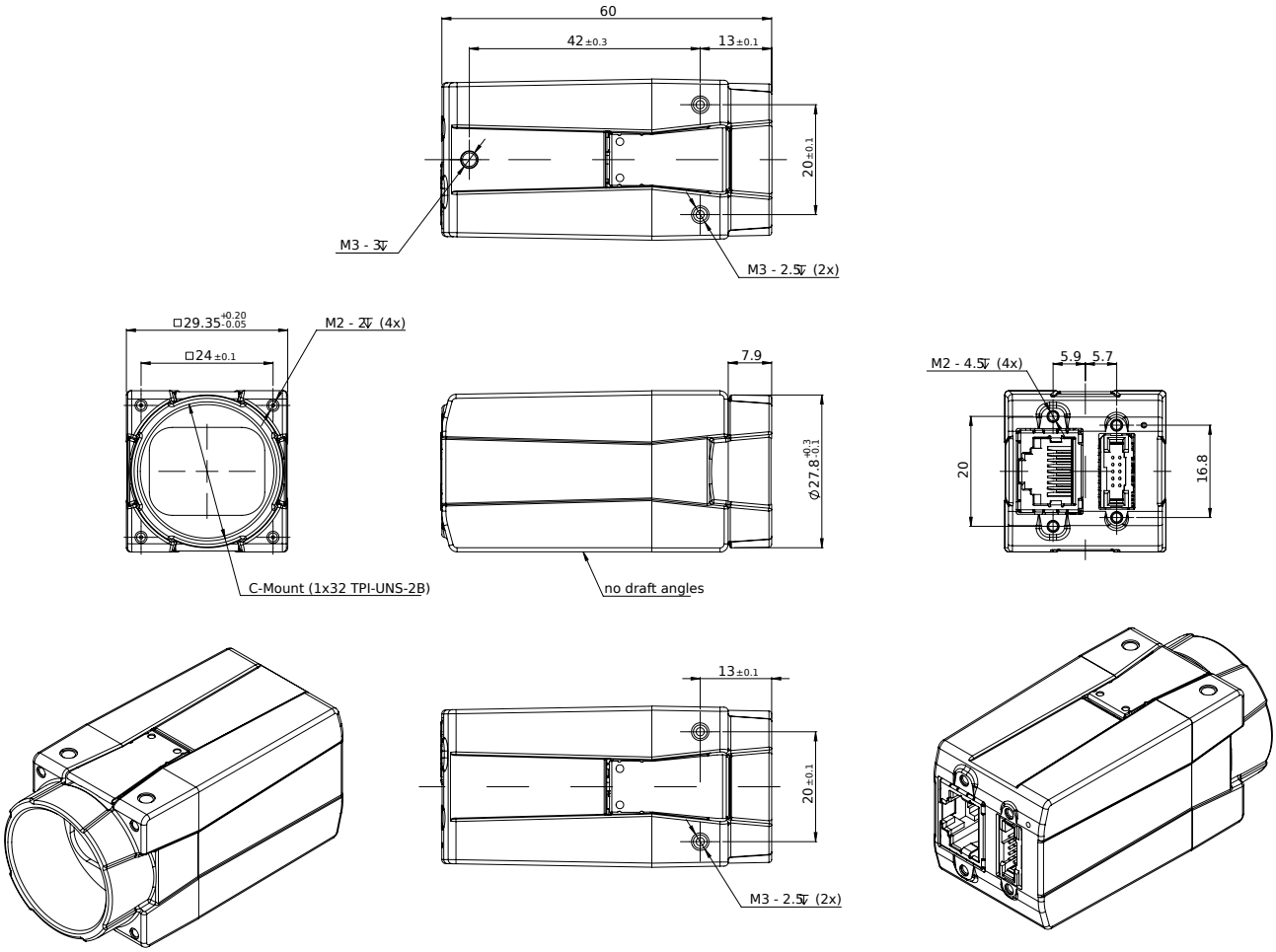
Technical drawing