Alvium
1800 C-030 VSWIR

- IMX991 VSWIR sensor
- ALVIUM image processing
- MIPI CSI-2 interface
- Various hardware options

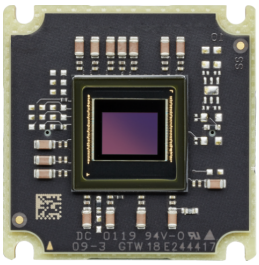

Hardware option: Bare Board

Alvium 1800 C – High-performance camera modules for embedded vision

Machine vision sensors for embedded system developers

Alvium 1800 C-030 VSWIR with Sony IMX991 | InGaAs runs 132.0 frames per second at 0.3 MP resolution.

The powerful Alvium 1800 C MIPI CSI-2 camera series gives embedded system developers access to Sony's high-performance image sensors popular in the machine vision industry. These sensors with resolutions up to 20 megapixels deliver excellent image quality and up to twice the frame rates compared to similar Alvium 1500 C models.

To operate Alvium CSI-2 cameras on your vision system, Allied Vision provides different access modes: - **GenICam for CSI-2 Access** controls the camera by GenICam features, using the Alvium CSI-2 driver and CSI-2 transport layer (TL) directly. All Alvium 1800 C models are supported. Please find FAQs and installation instructions in the Getting Started with GenICam for CSI-2 application note. - Direct Register Access (DRA) to control the cameras via registers for advanced users. - **Video4Linux2 Access** allows to control the cameras via established V4L2 API and applications like GStreamer and OpenCV. Open-source CSI-2 drivers are available on GitHub for different boards and system on chips (SoCs).

In addition to lens mount and housing options, see Customization and OEM Solutions webpage for additional options.

Allied Vision

Specifications

Product code	15955
Interface	MIPI CSI-2, up to 4 lanes
Resolution	656 (H) × 520 (V)
Spectral range	400 to 1700 nm
Sensor	Sony IMX991 | InGaAs
Sensor type	InGaAs
Shutter mode	GS (Global shutter)
Sensor size	Type 1/4 VSWIR
Pixel size	5 µm × 5 µm
Lens mounts (available)	C-Mount, CS-Mount, S-Mount
Max. frame rate at full resolution	132 fps using 1 to 4 lanes, RAW8 (GREY)
ADC	12 Bit
Image buffer (RAM)	256 KByte
Non-volatile memory (Flash)	1024 KByte

Output	
Bit depth	8-bit, 10-bit, 12-bit; Adaptive (10-bit, 12-bit)
Monochrome pixel formats	PFNC: Mono8 (default), Mono10, Mono10p, Mono12, Mono12p | CSI-2: RAW8 (default), RAW10, RAW12 | FOURCC: GREY, Y10, Y12

General purpose inputs/outputs (GPIOs)	
TTL I/Os	2 programmable GPIOs

Operating conditions/dimensions	
Operating temperature	-20 °C to +85 °C (cooling areas)
Power requirements (DC)	5 VDC over MIPI CSI-2
Power consumption	Typical: 1.8 W
Mass	10 g
Body dimensions (L × W × H in mm)	8 × 26 × 26

Quantum efficiency

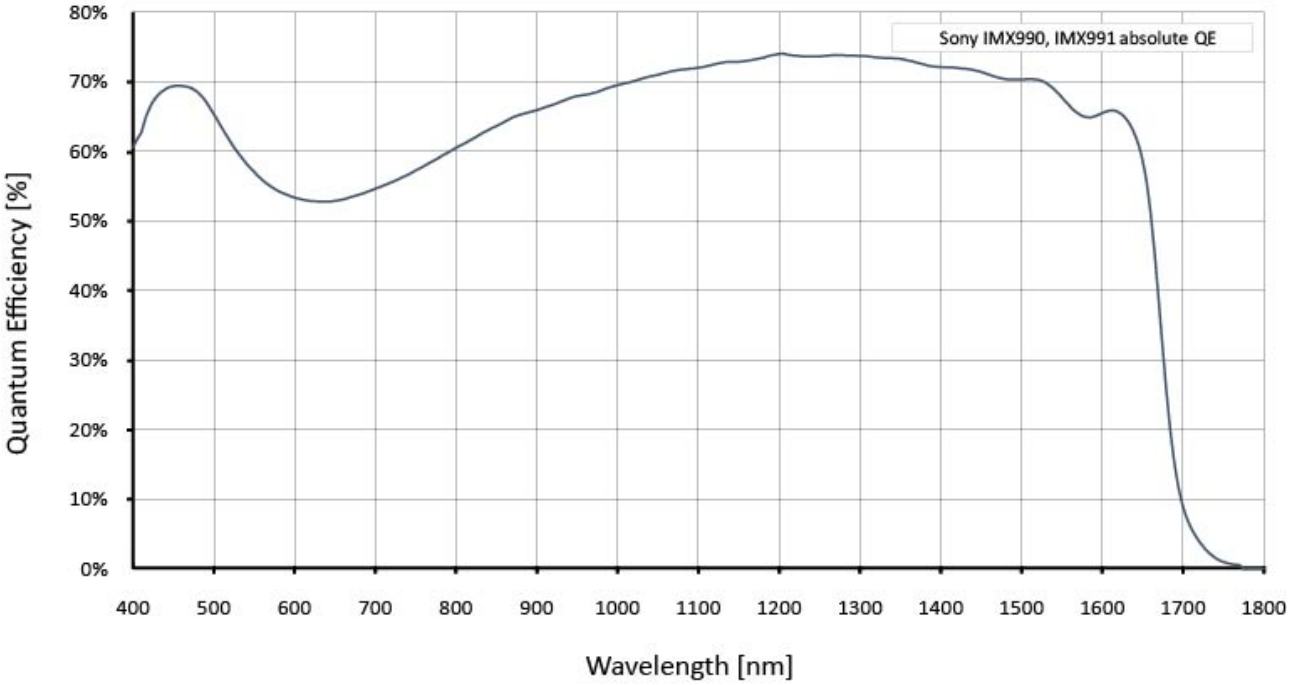

Features

Image control: Auto

- Auto exposure
- Auto gain

Image control: Other

- Adaptive noise correction*
- Binning (digital)
- Black level
- Contrast*
- Custom convolution*
- DPC (defect pixel correction)
- Gamma
- Lens shading correction*
- LUT (look-up table)*
- Reverse X/Y
- ROI (region of interest)
- Sharpness/Blur*

Camera control

- Acquisition frame rate
- Counters and timers*
- Firmware update in the field
- I/O and trigger control
- Image chunk data*
- Readout modes (SensorBitDepth)*
- Serial I/Os*
- Temperature monitoring
- User sets*

*GenICam for CSI-2 Access

Technical drawing

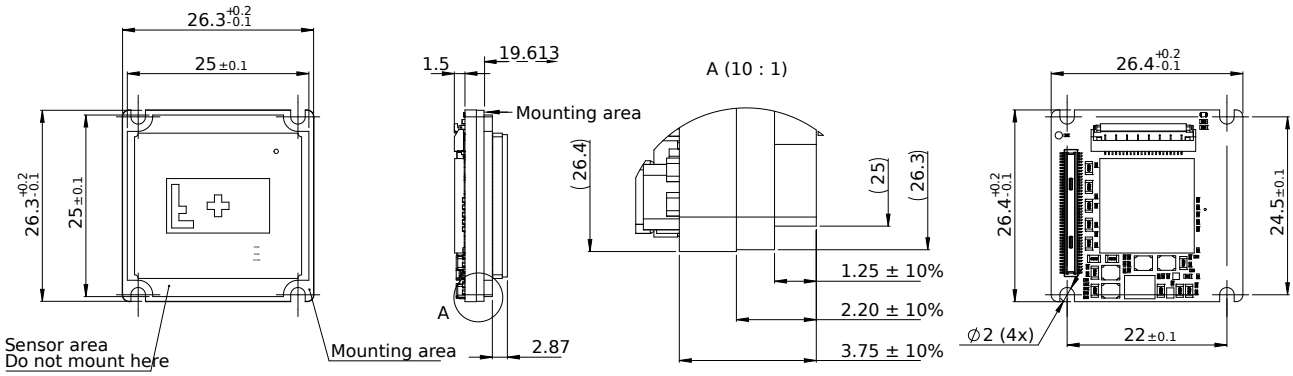

Applications

Alvium 1800 C-030 cameras are sensitive in the visible and the SWIR spectrum and are well-suited for many typical SWIR applications in various industry branches:

- Semiconductor industry: Solar cell and chip inspection
- Recycling industry: Plastic sorting
- Medical imaging, sciences: Hyper- and multi-spectral imaging
- Glass industry: Defect detection through hot glass
- Agriculture industry: Airborne remote sensing
- Printing industry: Seeing hidden features
- Surveillance: Vision enhancement (for example, seeing through fog or haze)
- Security: Counterfeit detection (such as for money, faked hair, or skin)