Allied Vision

mipi

Alvium
1800 C-511c

- IMX547 CMOS sensor
- ALVIUM image processing
- MIPI CSI-2 interface
- Various hardware options

Hardware option: Open Housing S-Mount

Alvium 1800 C – High-performance camera modules for embedded vision

Machine vision sensors for embedded system developers

Alvium 1800 C-511 with Sony IMX547 runs 79.0 frames per second at 5.1 MP resolution.

The powerful Alvium 1800 C MIPI CSI-2 camera series gives embedded system developers access to Sony's high-performance image sensors popular in the machine vision industry. These sensors with resolutions up to 20 megapixels deliver excellent image quality and up to twice the frame rates compared to similar Alvium 1500 C models.

To operate Alvium CSI-2 cameras on your vision system, Allied Vision provides different access modes: - **GenICam for CSI-2 Access** controls the camera by GenICam features, using the Alvium CSI-2 driver and CSI-2 transport layer (TL) directly. All Alvium 1800 C models are supported. Please find FAQs and installation instructions in the Getting Started with GenICam for CSI-2 application note. - Direct Register Access (DRA) to control the cameras via registers for advanced users. - **Video4Linux2 Access** allows to control the cameras via established V4L2 API and applications like GStreamer and OpenCV. Open-source CSI-2 drivers are available on GitHub for different boards and system on chips (SoCs).

In addition to lens mount and housing options, see Customization and OEM Solutions webpage for additional options.

Specifications

Product code	15926
Interface	MIPI CSI-2, up to 4 lanes
Resolution	2464 (H) × 2064 (V)
Spectral range	300 to 1100 nm
Sensor	Sony IMX547
Sensor type	CMOS
Shutter mode	GS (Global shutter)
Sensor size	Type 1/1.8
Pixel size	2.74 µm × 2.74 µm
Lens mount	S-Mount
Max. frame rate at full resolution	79 fps using 4 lanes, RAW8 (GREY)
ADC	12 Bit
Image buffer (RAM)	256 KByte
Non-volatile memory (Flash)	1024 KByte

Imaging performance

Imaging performance data is based on the evaluation methods in the EMVA 1288 Release 3.1 standard for characterization of image sensors and cameras. Measurements are typical values for monochrome models measured without optical filter.

Quantum efficiency at 529 nm	68 %
Temporal dark noise	2.3 e^-
Saturation capacity	9400 e^-
Dynamic range	70 dB
Absolute sensitivity threshold	2.9 e^-

Output	
Bit depth	12-bit
Monochrome pixel formats	PFNC: Mono8, Mono10, Mono10p, Mono12, Mono12p | CSI-2: RAW8 , RAW10, RAW12 | FOURCC: GREY, Y10, Y12
YUV color pixel formats	PFNC: YCbCr411_8_CbYYCrYY, YCbCr422_8_CbYCrY, YCbCr8_CbYCr | CSI-2: YUV422 8-bit | FOURCC: UYVY

RGB color pixel formats	PFNC: RGB8 (default), BGR8 | CSI-2: RGB888 (default) | FOURCC: RGB3
Raw color pixel formats (Bayer)	PFNC: BayerGR8, BayerGR10, BayerGR10p, BayerGR12, BayerGR12p

General purpose inputs/outputs (GPIOs)	
TTL I/Os	2 programmable GPIOs

Operating conditions/dimensions	
Operating temperature	-20 °C to +65 °C (housing)
Power requirements (DC)	5 VDC over MIPI CSI-2
Power consumption	Typical: 3.0 W
Mass	40 g
Body dimensions (L × W × H in mm)	20 × 29 × 29

Quantum efficiency

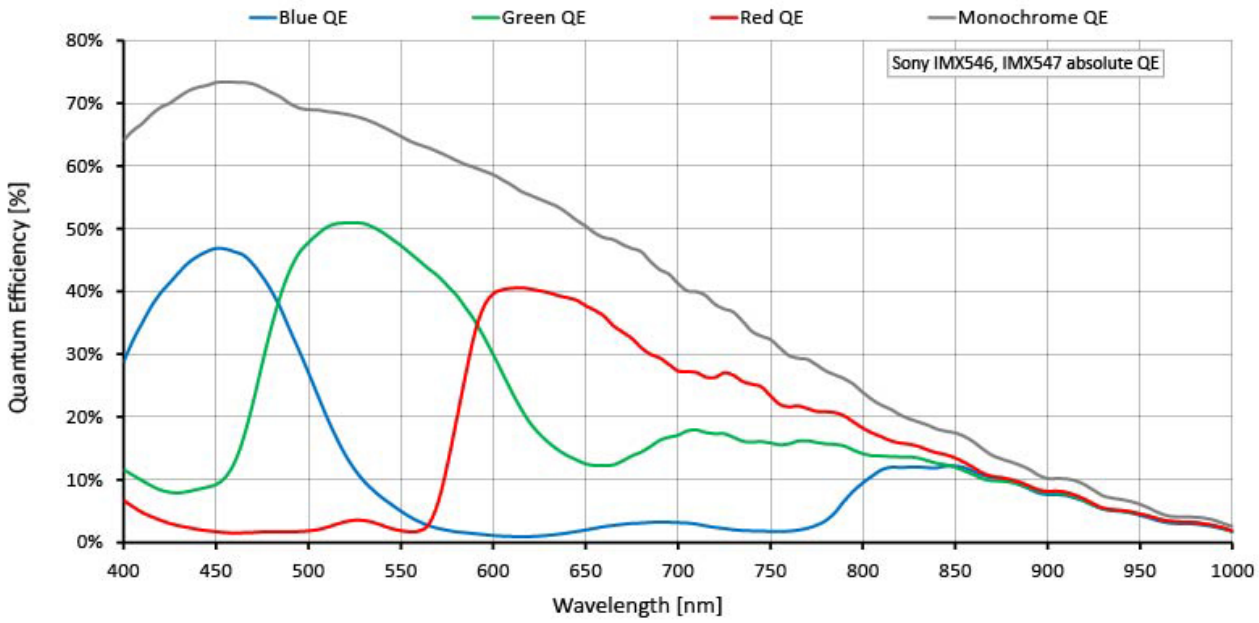

Features

Image control: Auto

- Auto exposure
- Auto gain
- Auto white balance (color models)

Image control: Other

- Adaptive noise correction*
- Binning (digital)
- Binning (digital, sensor)*
- Black level
- Color transformation (incl. hue, saturation; color models)
- Contrast*
- Custom convolution*
- De-Bayering up to 5×5 (color models)
- DPC (defect pixel correction)
- FPNC (fixed pattern noise correction)
- Gamma
- Lens shading correction*
- LUT (look-up table)*
- Reverse X/Y
- ROI (region of interest)
- Sharpness/Blur*

Camera control

- Acquisition frame rate
- Counters and timers*
- Firmware update in the field
- I/O and trigger control
- Image chunk data*
- Serial I/Os*
- Temperature monitoring
- User sets*

*GenICam for CSI-2 Access
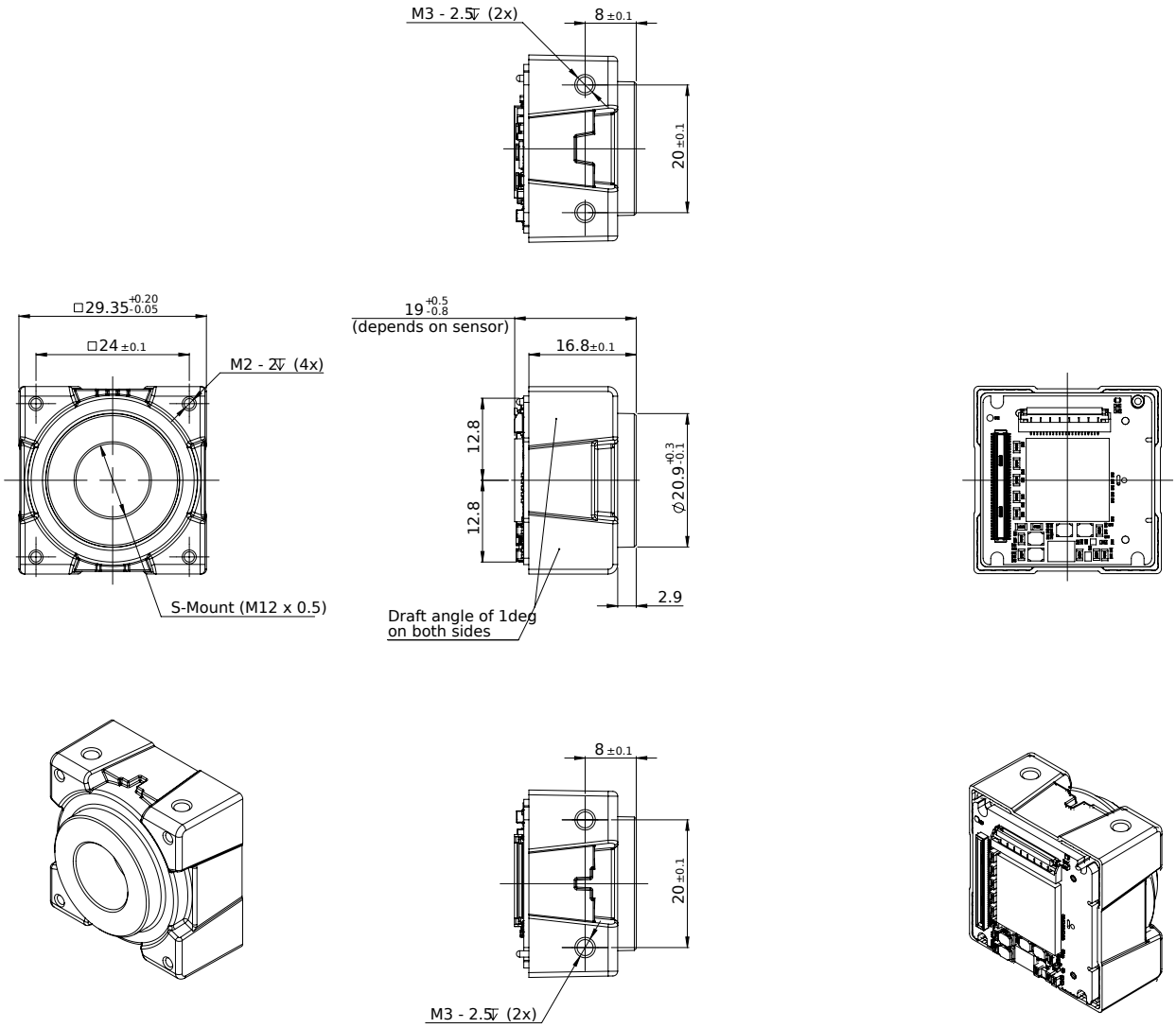
Technical drawing