Allied Vision

Alvium
1800 U-040c

Hardware option: Open Housing S-Mount 90°

- IMX287 CMOS sensor
- ALVIUM image processing
- USB3 Vision
- Various hardware options

Alvium 1800 U – Your entry into high-performance imaging

Industrial USB cameras with attractive price-performance ratio

Alvium 1800 U-040 with Sony IMX287 runs 494.0 frames per second at 0.4 MP resolution.

Alvium 1800 U is your entry into high-performance imaging with ALVIUM® Technology for industrial applications. Equipped with the newest generation of sensors, these small and lightweight cameras deliver high image quality and frame rates at the best price-performance ratio. With its USB3 Vision compliant interface and industrial-grade hardware, it is your workhorse for different machine vision applications whether it is on a PC-based or an embedded system.

Easy software integration with Vimba X and compatibility to the most popular third party image-processing libraries.

In addition to lens mount and housing options, see Customization and OEM Solutions webpage for additional options.

Allied Vision

Specifications

Product code	14182
Interface	USB3 Vision
Resolution	728 (H) × 544 (V)
Spectral range	300 to 1100 nm
Sensor	Sony IMX287
Sensor type	CMOS
Shutter mode	GS (Global shutter)
Sensor size	Type 1/2.9
Pixel size	6.9 µm × 6.9 µm
Lens mount	S-Mount
Optical Filter	Type Hoya C5000 IR cut filter
Max. frame rate at full resolution	494 fps at ⩾ 250 MByte/s, Mono8
ADC	12 Bit
Image buffer (RAM)	256 KByte
Non-volatile memory (Flash)	1024 KByte

Imaging performance

Imaging performance data is based on the evaluation methods in the EMVA 1288 Release 3.1 standard for characterization of image sensors and cameras. Measurements are typical values for monochrome models measured without optical filter.

Quantum efficiency at 529 nm	64 %
Temporal dark noise	3.2 e^-
Saturation capacity	20800 e^-
Dynamic range	74 dB
Absolute sensitivity threshold	4.0 e^-

Output	
Bit depth	8-bit, 10-bit, 12-bit; Adaptive (10-bit, 12-bit)
Monochrome pixel formats	Mono8, Mono10, Mono10p, Mono12, Mono12p
YUV color pixel formats	YCbCr411_8_CbYYCrYY, YCbCr422_8_CbYCrY, YCbCr8_CbYCr

RGB color pixel formats	RGB8 (default), BGR8
Raw color pixel formats (Bayer)	BayerRG8, BayerRG10, BayerRG10p, BayerRG12, BayerRG12p

General purpose inputs/outputs (GPIOs)	
TTL I/Os	4 programmable GPIOs

Operating conditions/dimensions	
Operating temperature	-20 °C to +65 °C (housing)
Power requirements (DC)	Power over USB 3.1 Gen 1 | External power 5.0 V
Power consumption	USB power: 1.9 W (typical) | Ext. power: 2.1 W (typical)
Mass	50 g
Body dimensions (L × W × H in mm)	25 × 32 × 29

Quantum efficiency

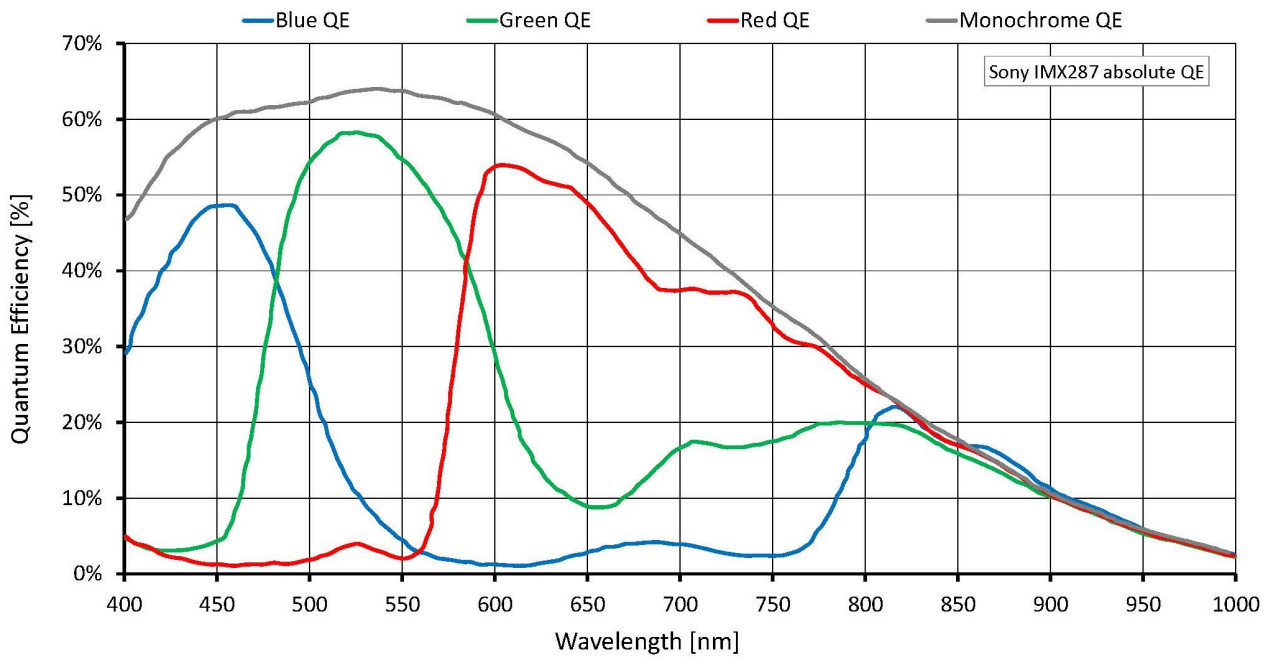

Features

Image control: Auto

- Auto exposure
- Auto gain
- Auto white balance (color models)

Image control: Other

- Adaptive noise correction
- Binning (digital)
- Black level
- Color transformation (incl. hue, saturation; color models)
- Contrast
- Custom convolution
- De-Bayering up to 5×5 (color models)
- DPC (defect pixel correction)
- FPNC (fixed pattern noise correction)
- Gamma
- Lens shading correction
- LUT (look-up table)
- Multiple ROIs (regions of interest)
- Reverse X/Y
- ROI (region of interest)
- Sharpness/Blur

Camera control

- Acquisition frame rate
- Bandwidth control
- Counters and timers
- Event channel
- Firmware update in the field
- I/O and trigger control
- Image chunk data
- Power Saving Mode
- Readout modes (SensorBitDepth)
- Sequencer
- Serial I/Os
- Temperature monitoring
- User sets
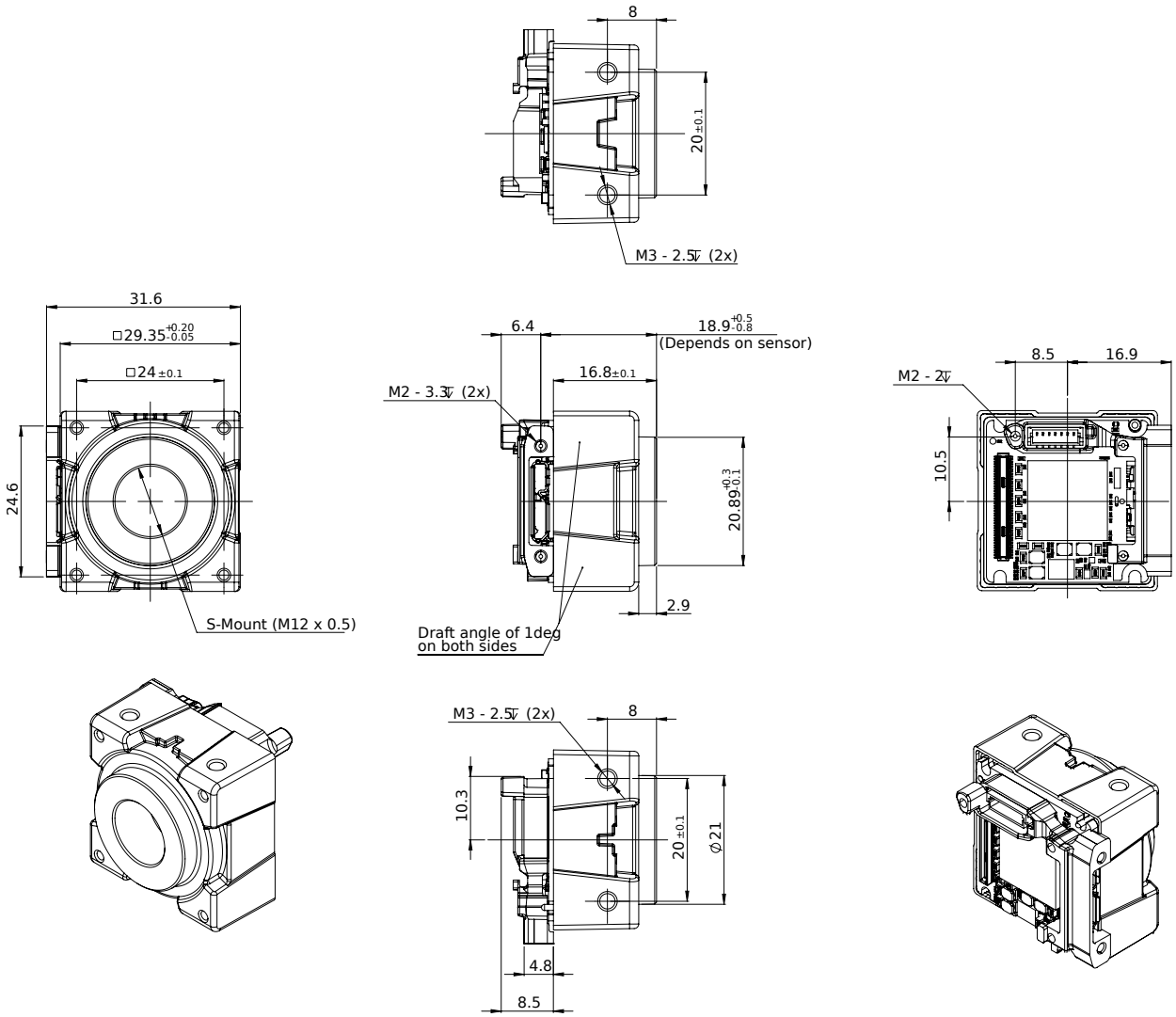
Technical drawing